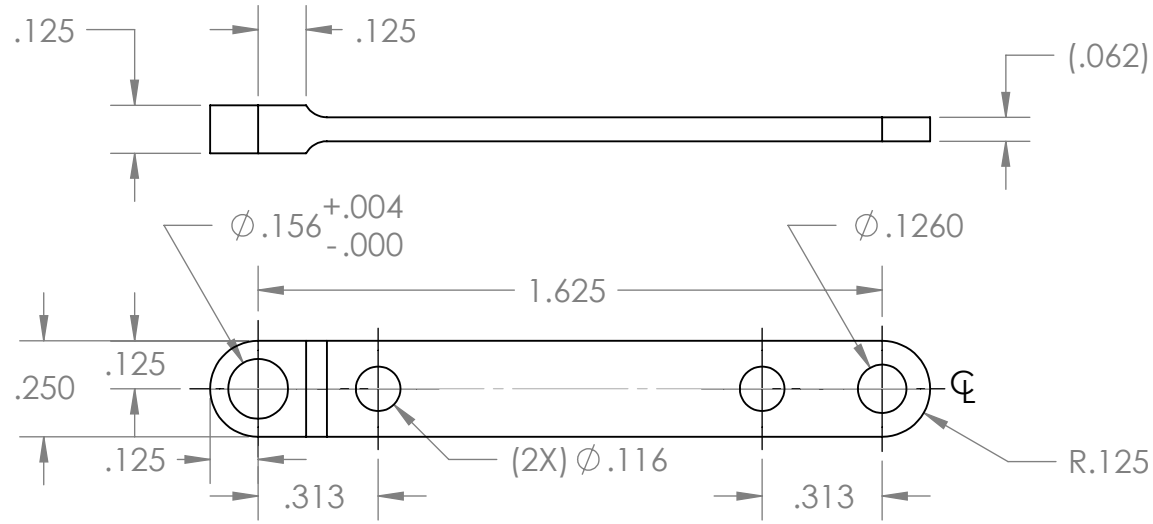


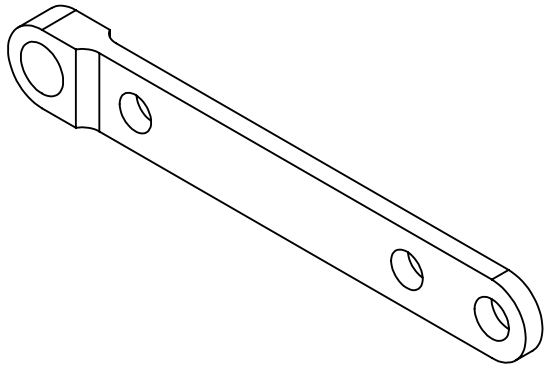

Note: Slip fit w/.063 slot
(REF) Part 13

Note: You can choose either design,
but the top one is more challenging.

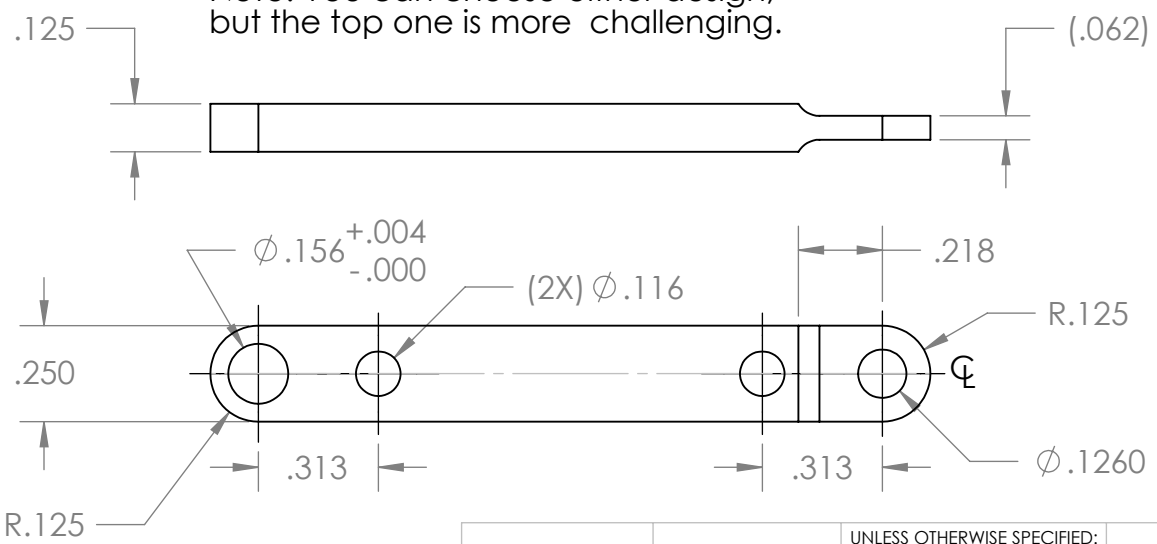


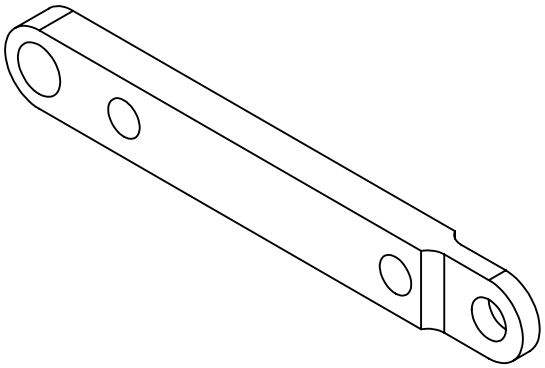

| | | | | | |
|---|---|---|---|---|---|
| | | UNLESS OTHERWISE SPECIFIED: | | NAME | DATE |
| | | DIMENSIONS ARE IN INCHES<br>TOLERANCES:<br>FRACTIONAL ±1/64<br>ANGULAR: MACH ±1 BEND ±<br>TWO PLACE DECIMAL ±.01<br>THREE PLACE DECIMAL ±.005<br>FOUR PLACE DECIMAL ±.0005 | DRAWN | CX | 3/20/10 |
| | | | CHECKED | CX | 3/21/10 |
| | | | ENG APPR. | | |
| | | | MFG APPR. | | |
| | | INTERPRET GEOMETRIC TOLERANCING PER: | Q.A. | | |
| 207 | | MATERIAL 6061 Aluminum | COMMENTS: BREAK ALL EDGES AND SHARP CORNERS. | | |
| NEXT ASSY | USED ON | FINISH NONE | | | |
| APPLICATION | | DO NOT SCALE DRAWING | | | |

TITLE:

# Displacer Connecting Rod

| SIZE | DWG. NO. | REV |
|---|---|---|
| A | 6 | B |
| SCALE: 2:1 | WEIGHT: | SHEET 1 OF 1 |

**PROPRIETARY AND CONFIDENTIAL**

THE INFORMATION CONTAINED IN THIS DRAWING IS THE SOLE PROPERTY OF <INSERT COMPANY NAME HERE>. ANY REPRODUCTION IN PART OR AS A WHOLE WITHOUT THE WRITTEN PERMISSION OF <INSERT COMPANY NAME HERE> IS PROHIBITED.

5 4 3 2 1